HKBN
ENTERPRISE SOLUTIONS

Operator Connect
Teams Voice
Yealink MP56 E2 Teams Phone
Quick User Guide

Prepared by
HKBN Enterprise Solutions

Version 1.0



Yealink MP56 E2 Teams Phone Quick User Guide

1. Assemble the Phone

1.1 Connect the handset to the phone using the handset cord.

1.2 Attach the desk stand to the rear of the phone.

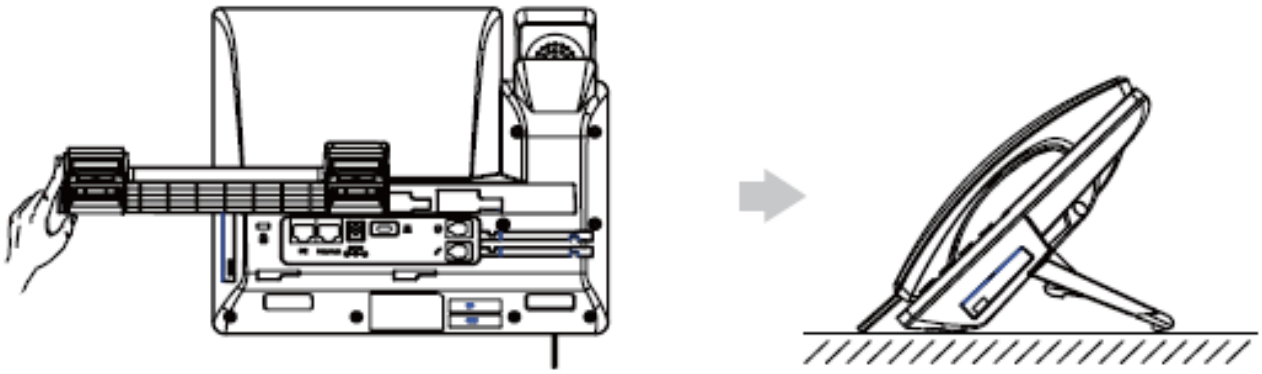

2. Connect Network & Power

Option A (Recommended): Connect the LAN cable to a PoE switch.

Option B: Connect LAN cable and use the Yealink power adapter.

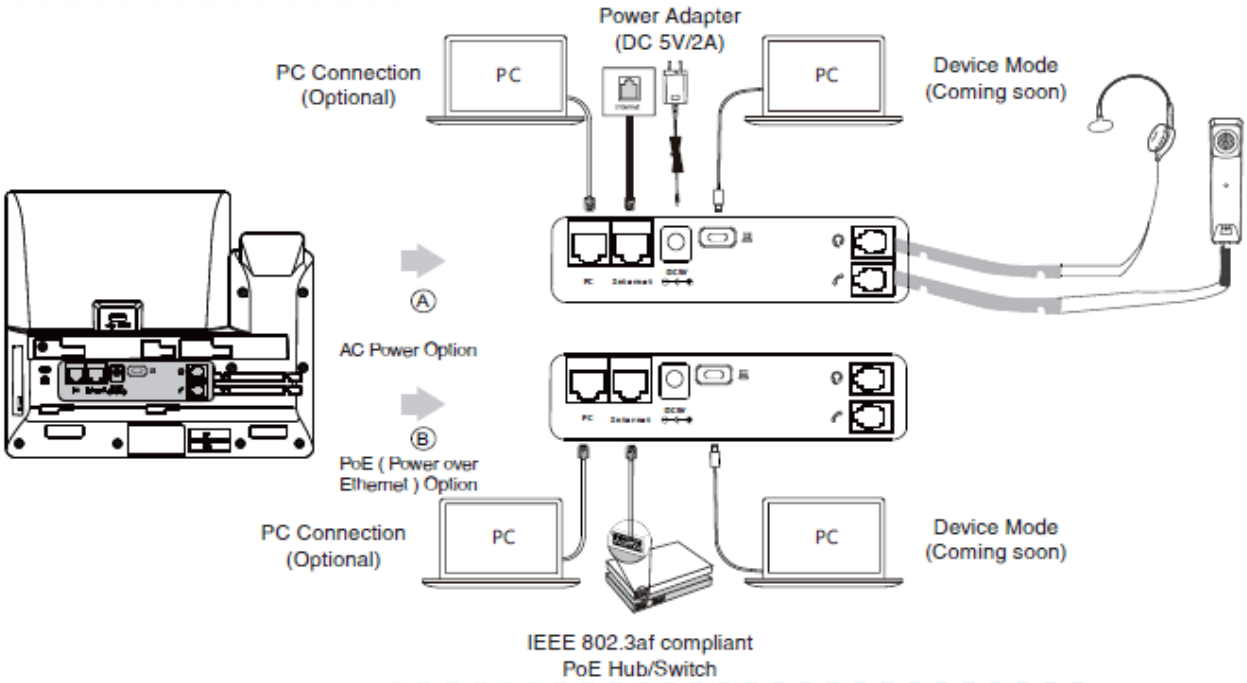

© HKBN Enterprise Solutions. All rights reserved.

3. Power On for Initial Setup

3.1 Boot the phone after connecting the power.

3.2 Select the display language and click ✓ in the top right corner.



3.3 Select the desired time zone and click ✓ in the top right corner.



4. Activate / Deactivate Wi-Fi Mode

4.1 Tap the account avatar or ☰.

4.2 Go to **Settings > Device settings > Wi-Fi.**

4.3 Tap the toggle to turn on / off **Wi-Fi**.

4.4 If Wi-Fi is turned on, select a network.

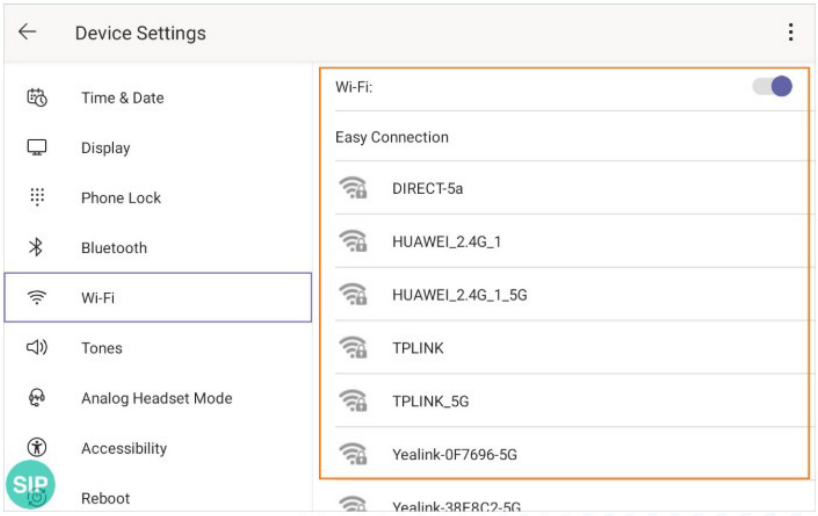

© HKBN Enterprise Solutions. All rights reserved.

5. Sign in to Microsoft Teams

5.1 Tap **Sign in on this device.**

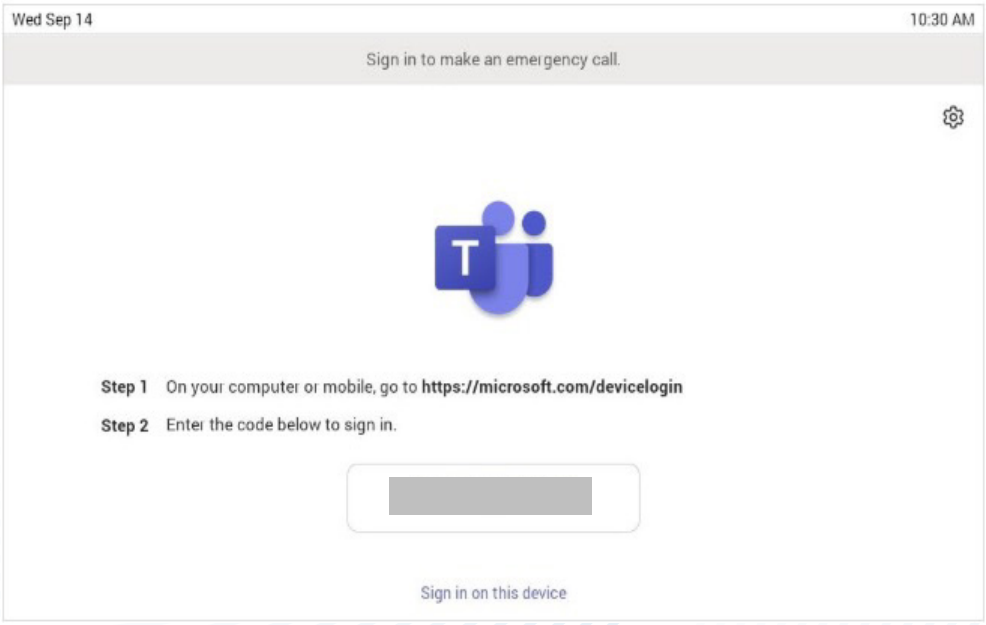

5.2 Enter your user credentials and tap **Sign in.**

5.3 Enter your password and tap **Sign in.**

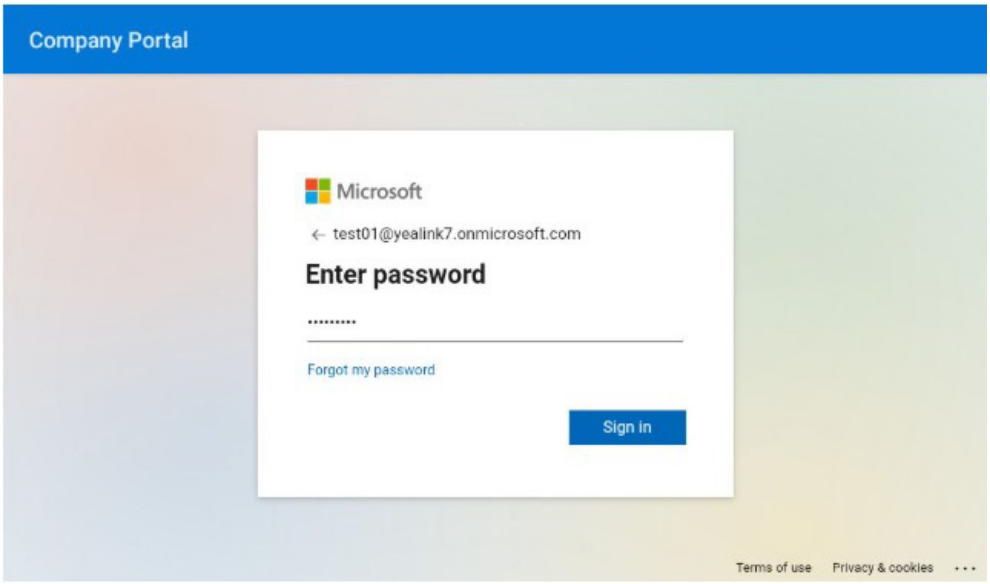

5.4 After the device signs in successfully, tap **Got it.**

© HKBN Enterprise Solutions. All rights reserved.

6. Ready to use

Confirm that you can see your account avatar, date & time, telephone number, calls, calendar, voicemail, and more.

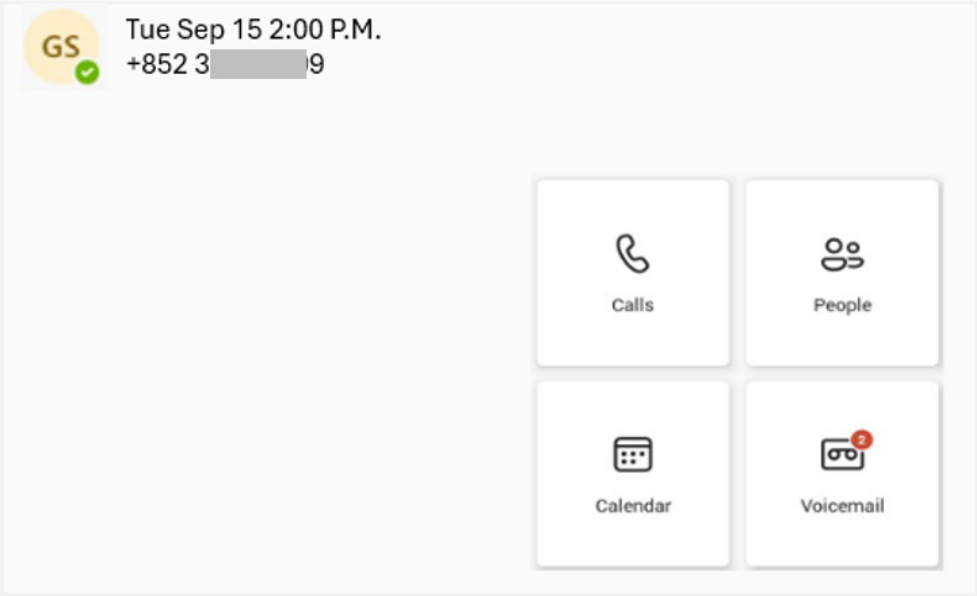

7. Troubleshooting

No power: Check network connection using PoE or power adapter.

Cannot sign in: Verify internet and Microsoft account.

No calling: Confirm Teams Phone license and number assignment.

8. Factory Reset

When the phone is idle, press and hold the pound key (#) and star key (*) for about 6 seconds to reset the device to factory settings.

For detailed user guide,
please refer to: https://support.yealink.com/document-detail/56ee4a2fd0c14760a0cd22baf26ead7c

© HKBN Enterprise Solutions. All rights reserved.